Bedside Panel Installation using LORD Fusor® Metal Bonding Adhesives

Materials Needed:

- LORD Fusor 108B/109B Metal Bonding Adhesive (Medium) or LORD Fusor 112B/113B Metal Bonding Adhesive (Slow)
- LORD Fusor 123/126 Non-Sag Seam Sealer (Fast), or LORD Fusor 123EZ/126EZ Non-Sag Seam Sealer (Medium), or LORD Fusor 800EZ/801EZ/803EZ Factory Match Urethane Sealer/Adhesive
- LORD Fusor 300 or 301 Manual Dispensing Gun, or LORD Fusor 304 or 304X Pneumatic Dispensing Gun

Both LORD Fusor® 108B/109B and 112B/113B metal bonding adhesives are recommended for outer bedside panel replacement, depending on temperature and work time needed. For this repair procedure, LORD Fusor 112B/113B metal bonding adhesive will be used.

Surface Preparation

1. Straighten the uni-body on a frame machine to manufacturer's specifications.
2. Once the damaged vehicle has been straightened, remove the damaged panels with an air saw or air chisel. Remove only the large portions, making sure not to cut into the mating flanges or adjacent parts.
3. Using a spot-weld cutter, drill out the spot welds and remove the remaining weld flanges of the panel to be replaced.
4. Pay special attention to preparing any damaged flanges on the vehicle. Straighten these flanges using a hammer and a dolly.
5. Grind the mating surface of the original flanges (not greater than 1 inch [25.4 mm]), being sure to remove any adhesive, e-coating, corrosion protection or galvanized coating. If the metal has a pewter appearance, then all of the galvanized coating has not been removed. The metal should be shiny in appearance. Be careful not to damage the corners or thin the metal.
6. Carefully grind the entire outer edges of the new panel to which LORD Fusor metal bonding adhesive (Stock #112B/113B) will be applied, making sure to remove any e-coat, paint or galvanized coatings as described in Step #5.
7. Ensure that the vehicle is evenly supported at normal suspension points.
8. Pre-fit all parts to ensure proper alignment.

Adhesive Preparation

1. Insert the LORD Fusor metal bonding adhesive cartridge (Stock #112B/113B) into the dispensing gun. Squeeze a small amount of product from each side of the cartridge to level the plungers.
2. Attach a mixing tip and dispense a small amount of adhesive, which is about the length and width of the mixer. Dispense until the product is evenly mixed and the color is consistent.

Note: From this point you will have about 70 minutes at 70°F (21°C) to apply the adhesive and assemble the components.

Panel Installation

1. Apply a 3/8 to 1/2 inch (9.5 to 12.7 mm) bead of LORD Fusor metal bonding adhesive to the bare metal mating surfaces.
2. Properly position the new panel. Once the panel has been positioned, do not pull it away from the vehicle. If repositioning is necessary, slide the panel. This maintains proper contact between the two panels.
3. Clamp tightly and evenly. The glass beads in the adhesive will prevent you from over clamping the bondline. Apply screws in hard-to-clamp areas. Where possible, wipe excess adhesive from panel before it cures. This will save you time later.
4. Allow the adhesive to cure for 4-5 hours at 70°F (21°C). Expect the adhesive to be a little "tacky" on the surface as this is a normal property of the adhesive.

5. While the adhesive is curing or afterwards, the bottom of the rear post at the tailgate and the front plate flange must be welded. These are considered structural areas of the vehicle and need to be welded **(see Illustration A)**.
6. Remove clamps and screws. All excess adhesive must be removed from the cosmetic repair area. Recess screw holes with a punch and hammer, and fill with fiber-filled body filler.
7. Prime and paint per manufacturer's recommendations.
8. Use LORD Fusor non-sag seam sealer (Stock #123/126 or #123EZ/126EZ) or LORD Fusor factory match urethane sealer/adhesive (Stock #800EZ/801EZ/803EZ) wherever a cosmetic seam sealer is required.

Note: Adhesive metal bonding is only recommended on secondary, exterior body panels (skins) and should not be used for structural bonding. If a new bedside panel is serviced as an inner and outer panel assembly, then it must be welded per OEM recommendations. Installation of an inner/outer bedside panel assembly is considered to be structural panel replacement.

Note: For purposes of this procedure, LORD Fusor 112B/113B metal bonding adhesive is used at 70°F (21°C). The chart below shows open time vs. temperature for both LORD Fusor 112B/113B and 108B/109B metal bonding adhesives.

Temperature	LORD Fusor 112B/113B Metal Bonding Adhesive	LORD Fusor 108B/109B Metal Bonding Adhesive
70°F (21°C)	70 minutes	40-50 minutes
90°F (32°C)	35-40 minutes	20-25 minutes

Illustration A

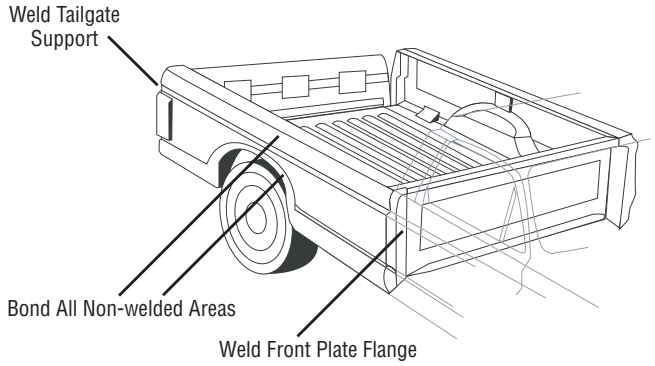

Note: Not drawn to scale.

Fusor and "Ask Us How" are trademarks of LORD Corporation or one of its subsidiaries.

LORD provides valuable expertise in adhesives and coatings, vibration and motion control, and magnetically responsive technologies. Our people work in collaboration with our customers to help them increase the value of their products. Innovative and responsive in an ever-changing marketplace, we are focused on providing solutions for our customers worldwide . . . Ask Us How.

LORD Corporation
World Headquarters
111 Lord Drive
Cary, NC 27511-7923
USA

Customer Support Center
+1 877 ASK LORD (275 5673)

www.lord.com

©2006 LORD Corporation OD RP3008 (Rev.1 7/06)

LORD
Ask Us How™